NATOLI

YOU DEMAND. WE DELIVER.

CONTENTS

Chapter 1:	Tool Life Expectancy	1
Chapter 2:	First Impressions: Tablet Shape Can Impact Patient Acceptance	5
Chapter 3:	How to Avoid Sticking and Picking	9
Chapter 4:	Quality of Steel	15
Chapter 5:	Tablet Compression Tooling: Land or No Land?	19
Chapter 6:	Extended Head Flats Increase Dwell Time	23
Chapter 7:	Understanding the Importance of Punch Length and Cup Depth	27
Chapter 8:	The Key to Tableting Success: How to Choose the Right Tooling	33

NATOLI
YOU DEMAND. WE DELIVER.

CHAPTER 1:

TOOL LIFE EXPECTANCY

One of the most common questions to ask tooling vendors is: "How long should a set of tools last?" The answer depends on a host of factors: tablet configuration, characteristics of the material being compressed, lubrication of the punches, compression force, press cleanliness, and steel type, just to name a few. But you can prolong and protect your investment by evaluating the life of punches and dies.

MAINTAIN YOUR TABLET COMPRESSION TOOLING TO RECEIVE A LARGE RETURN ON INVESTMENT

Properly maintained tools result in tablet manufacturers producing the highest quality tablets preferred by consumers. While tooling is a significant investment, individual punches and dies represent a small portion of production costs in relation to the purchase and maintenance of machines. The minor costs include fluid bed dryers, tablet presses, coating, and packaging equipment. However, the many sets of necessary tooling may amount to a sizable expenditure over the life of a product. Excessively worn or improperly maintained tools create a tremendous liability because they create a perception of poor quality in consumers' minds.



HOW TO MAINTAIN TOOLING TO ENSURE MAXIMUM RETURN

1. PROPER HANDLING AND STORAGE

Proper handling and storage is as simple as using tooling storage bins. The bins separate the tools and keep them from striking one another. Damage, such as nicks and dings on and around the punch tip, can cause dark specks, product discoloration, capping, lamination, and other visual defects. Tablet compression technicians sometimes lack a systematic handling procedure.

NATOLI

YOU DEMAND. WE DELIVER.

It is surprising just how many tools need to be replaced each year due to mishandling; these small accidents can add up to big costs! Natoli recommends placing a desiccant pack inside the sealed tooling storage box or drawer. Alternatively, you can include racks and cabinets that provide adequate protection during storage and transport.

2. PROPER CLEANING

A cleaning procedure with minimum human interaction is ideal to ensure that tools are cleaned consistently, reducing potential for damage. Ultrasonic cleaning with an automatic dryer is the optimum procedure, as it provides the tool with increased exposure to cleaning solution. Hard-to-reach portions of the punch, including keys and embossing, are cleaned without the risk of damage. The advantage of using a dryer in conjunction with an ultrasonic cleaner is that it eliminates the potential for surface corrosion and discoloration.

3. PROPER MAINTENANCE

Polishing tools refurbish the punch cups, restores land, and allow for minor repairs of punch heads, back angles, and barrels. Unlike drag finishing (the automatic method), using a cotton wheel often doubles the usable life of the punch, which maximizes your investment. Great care should be taken that only a small amount of material is removed during this process. Therefore, a dedicated, well-trained, and experienced tooling technician should complete this maintenance procedure. An inexperienced technician conducting the polishing could destroy a set of tools.



4. PROPER LUBRICATION

Automatic lubrication systems can provide false assurance that appropriate lubrication is being supplied to all necessary areas of the punches. Pre-lube the punches to ensure proper lubrication at press start-up. Use a proper brush to apply a food-grade lubricant to the barrel and food-grade grease to the head.

Most auto-lubrication systems require centrifuge force to migrate the lubricant into distribution channels and ports. This may take several minutes of runtime. Automatic lubrication may not reach critical points at press start-up, which can lead to damage on mating parts of the punch, including punch guides, keyways, cams, and pressure rolls, as well as premature wear to the tools. Improperly lubricated tools cause excessive friction, increasing the operating temperature of the punch. This results in a thermal expansion of the punch barrel, reducing the space allowed for lubrication. Ultimately, this might cause emergency stops, tool binding, and tool damage. (This mostly applies to presses with and without auto-lube systems.)

HOW TO EXTEND TOOL LIFE BEYOND PROACTIVE MEASURES

PROPER STEEL TYPE SELECTION

Different steels are optimal for different products. Reputable tool vendors will offer a variety of steel grades. Choosing the best steel for a specific product can go a long way in maximizing tooling life. For example, nutraceutical products are generally abrasive and would be best served using a premium, abrasion-resistant grade steel (D2, K340, M2) for the punches, and perhaps even carbide-lined dies. Similarly, high chrome steel punches (440C, M340) is best suited for a sticky pharma product. Using the right steel can not only extend tool life, but also reduce maintenance time intervals and prevent tableting defects during production. A reputable tooling vendor like Natoli Engineering should be able to recommend the correct steel for your specific tableting application.

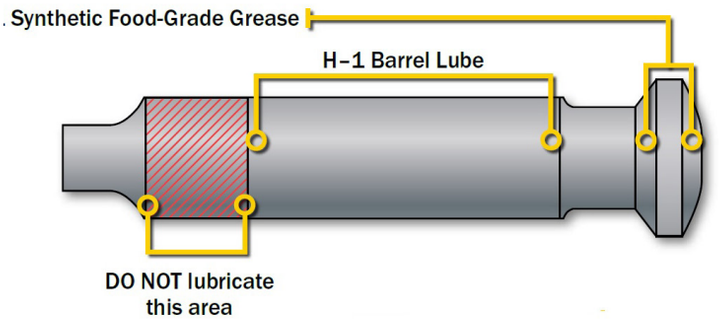

NATOLI

YOU DEMAND. WE DELIVER.

RESIZING TOOL LENGTHS

Proper tool working length ensures consistent tablet parameters are met throughout the set. Punches should be visually inspected and measured before being transferred into storage. Working lengths of the set should be within the tolerance range determined by internal SOPs or TSM specifications and guidelines.

In most cases, tools that are out of range specification on working length can be lightly machined and put back into specification. If the working lengths any of of your punches are out of range specification, contact your tooling supplier to discuss your options.

The service life of any tool set heavily depends on the abrasiveness of the formulation, compression force used, maintenance, set-up, operator skill, etc. These parameters are difficult to quantify. Remember, there are too many variables to establish a formula to predict exactly how many tablets a tool can produce in its service life. Maintaining the condition and integrity of your tools through proper lubrication, handling, storage, and maintenance, production ensures consistent and efficient tablet manufacturing while prolonging tool life and tablet quality.

So, if you're still wondering, "How long will my tools last?", or "Are my tools still good?", we can say that your tools are good if your tablets look good and they are within specification.



CUSTOM SOP

We can help create a custom SOP to ensure your maintenance program is efficient and effective.

NEED MAINTENANCE TRAINING?

We can arrange a one-on-one maintenance training session for your staff to learn fundamental and advanced techniques and procedures. Contact your Natoli representative today to arrange an on-site session at your company or at our technical training headquarters.

CHAPTER 2:

FIRST IMPRESSIONS: TABLET SHAPE CAN IMPACT PATIENT ACCEPTANCE

First impressions are everything. This is especially true for pharmaceutical, nutritional, and confectionary tablets. Discerning consumers often decide whether they will be repeat customers based on a tablet's appearance and their experience with it. A tablet's size, shape, color must impart the sense to the customer—often from their first time using the product—that the tablet is easy to swallow, without an undesirable after-taste. In the simplest terms, the end goal is to improve product appeal and influence consumer preference.

Since Since a tablet's design strongly influences consumer acceptance, a company's marketing department often provides significant input regarding the final design and coating decisions. However, Natoli highly recommends to include the production department in these decisions as well, because it is their responsibility to deliver the final product. Their experience and expertise can also significantly reduce production costs and issues, as some tablet designs present difficult manufacturing challenges, high tooling costs, and suboptimal physical properties of the tablets.

The flat-faced bevel edge (FFBE) and the flat-faced radius edge (FFRE) tablet designs were originally developed to improve tablet quality and reduce production costs. FFBE became popular early in the development of rotary tablet presses because it offered a significant improvement to the flat-faced design. The flat-faced tablet design once suffered from weak tablet edges because of powder leakage at the punch tip to die wall interface. Weak edges are prone



NATOLI

YOU DEMAND. WE DELIVER.

to chipping and excessive friability. Adding a beveled edge to the tooling was simple for the tooling vendor to machine and resulted in the formulation powder to be pushed back to the center of the die, forming stronger tablets. The FFBE design does, however, have limitations due to the maximum compression force that can be used without risking punch tip damage due to over compression. Ultimately, the FFBE design promotes stronger tablet edges. This is one reason that the FFBE configuration became a popular design for the tableting industry.

FFBE VS FFRE

The FFRE design features smoother edges than FFBE.

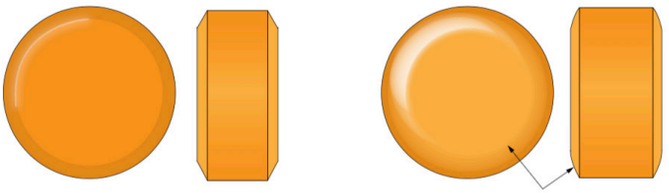

FLAT FACE BEVEL EDGE **FLAT FACE RADIUS EDGE**

SMOOTHER EDGES, GREATER ACCEPTANCE

Based on clients' experiences and our own research on face tablets, we recommend customers use a FFRE design rather than a FFBE design for their flat face tablets. Performing a Finite Element Analysis (FEA) of a FFBE and FFRE design of the same size indicates a significant allowable increase in the maximum compression force that can be utilized for tablet compression when using an FFRE design. This optimized cup configuration allows the manufacturer the option of using additional compression force with no associated risk to the tooling or tablet press, to increase tablet breaking strength, as opposed to changing the formulation to accommodate the desired tablet hardness. Tablets produced by higher compression forces are commonly less prone to edge erosion, sticking, and picking.

> **“Our recommendations are solely intended to benefit our clients designs.”**



DALE NATOLI
President
Natoli Engineering Company

With the FFRE design, although the differences are sometimes visibly imperceptible, the tablet edges are smoother. Because of this, customers' impression of the FFRE design is that of a softer appearance and more pleasant mouth feel. The latter can offer a more positive perception that tablets are easier to swallow, particularly for elderly patients. These aesthetics are important to providing a first impression that is essential to establishing a successful brand. Therefore, a growing number of companies are adopting FFRE rather than FFBE for their uncoated flat-faced tablets. Companies seeking to produce quality tablets with greater consumer acceptance should consider this trend.

NATOLI

YOU DEMAND. WE DELIVER.

INCREASE STRENGTH BY INCREASING BEVEL TO FLAT RADIUS

Figure 3. Von Mises Stress Distribution plots, Flat Face Bevel Edge vs. Flat Face Radius Edge

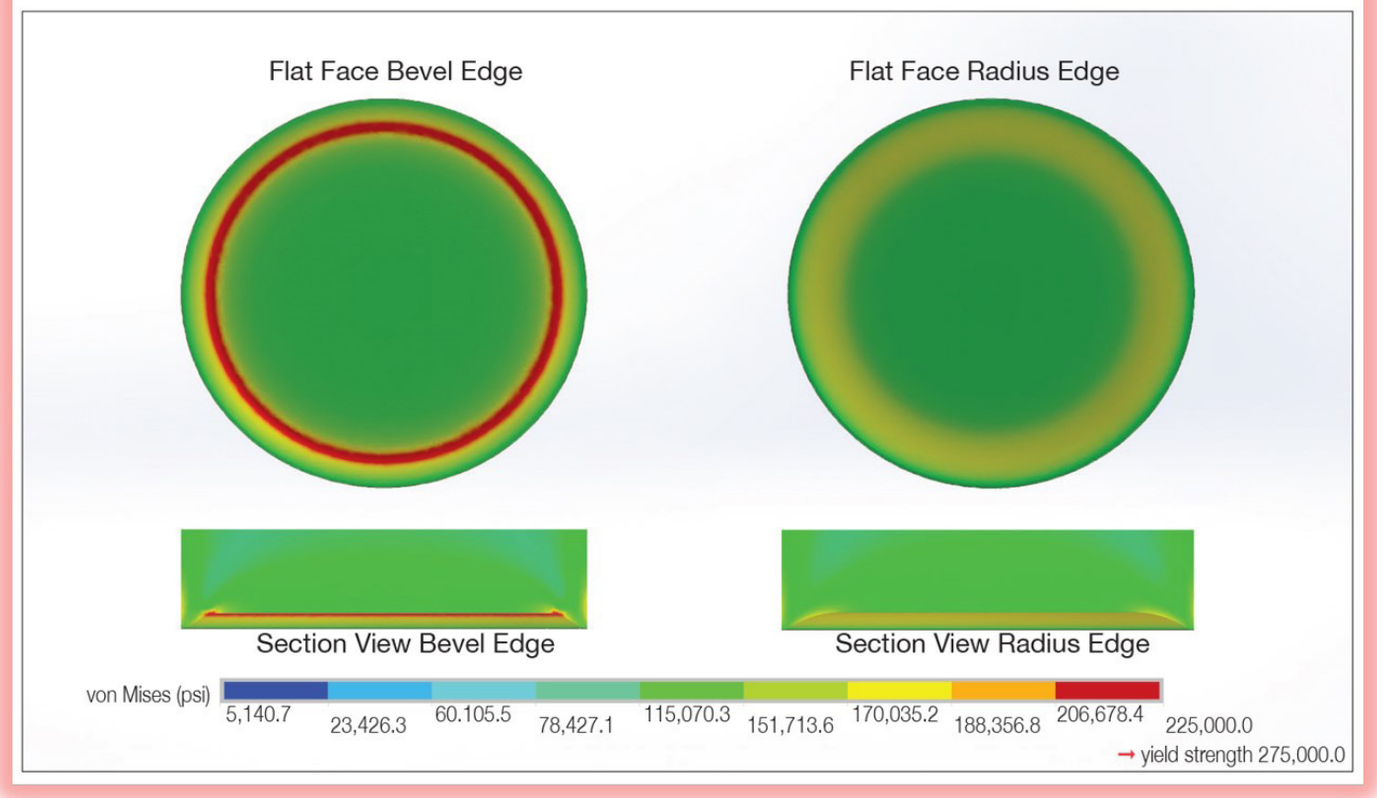

CHAPTER 3:

HOW TO AVOID STICKING AND PICKING

Sticking occurs when formulation granules stick to the face of the punch cup. Picking refers to the formulation sticking in the letters and characters of punch embossing. Both result in tablet defects and lower production due to time spent troubleshooting. Sticking and picking problems are common in tablet manufacturing, whether in pharmaceutical, nutraceutical, or confectionery applications. These common issues typically arise from either formulation or tablet design inadequacies; they can contribute to compression issues. Both emerge because of the differences in physical properties of the formulation excipients and drug substance. The process of blending components of a formulation may result in a powder that will either consolidate and compress, or not. Since failure to compress into a tablet is a separate issue, we will only consider powders that compress in this chapter.

In the regulated (and competitive) world of drug-product manufacturing, there can be a sense of urgency to develop a new molecule. This urgency may result in hasty decisions to enter clinical trials or submit for regulatory approval with a formulation that has unanticipated compression scale-up problems. And yet, the design process for an oral solid dosage form often overlooks some of the seemingly minor details of tablet design. Tablet defects can occur as the manufacturing scales up from clinical to full-patient-population supply. Pharmaceutical company marketing departments' desires for certain tablet shapes and logos to enhance brand recognition are a source of design constraints, often resulting in post-approval manufacturing complications. Compression tooling manufacturers can identify potential sticking and picking issues before tablet and tool designs have been finalized, reducing the challenge shared by the tablet manufacturer and the tooling vendor.

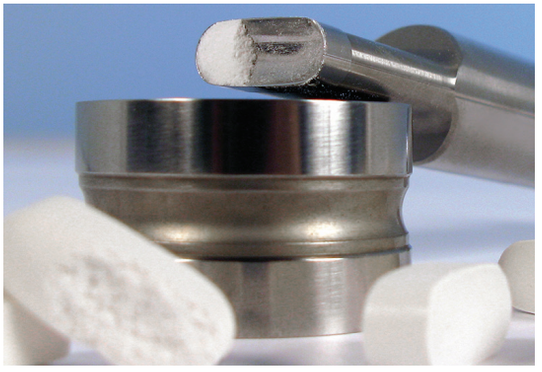

NATOLI

YOU DEMAND. WE DELIVER.

COHESIVE FORCES: FORMING A SOLID DOSE TABLET

Formation of a compact is the result of chemical dispersive and mechanical forces joining particles to form a solid of measurable density and porosity. The cohesive forces binding the particles can be assessed through a series of studies to determine whether problems with tablet compaction can be anticipated. Compaction profiles and strain rate studies are important to development projects. These studies ensure high probability for successful scale-up and technical transfer. Therefore, market supply is unaffected because technical due diligence was overlooked.



PICKING ON EMBOSSED DESIGN

Tablet particles are bound by cohesive forces. However, during the compression process, the cohesive forces binding the particles contend with the adhesive forces of the punch cup and, if present, the embossing within the punch cup. The first stage of a sticking problem occurs when the adhesive force of the punch cup pulls even a single particle away from the tablet. A recent publication showed this is mostly caused by the physical properties of the active pharmaceutical ingredient (API), and the mechanism and kinetics can be successfully modeled.

SIMPLE CONSIDERATIONS TO ALLEVIATE STICKING AND PICKING

When powder sticks in the embossed letters, one of the first things to check is the moisture level of the formulation. Remediation of picking and sticking does not always equate to changing the tooling used for tablet manufacturing. Insufficient compression force is also a potential source of picking because the compaction of the powder is not complete. This means the adhesive forces can readily overcome the cohesive forces of the improperly compressed tablet.

Careful inspection of the punch cups is also essential to ensure there are no surface scratches to capture small formulation particles. Scratches can lead to filming, a slow form of sticking, often due to excess moisture in the granulation. Polish the punches when surface scratches are identified. A specialized polishing compound can impart greater lubricity and better product release

properties. It is also worth noting that a mirror finish on the punch cup may not be the ideal surface finish for every product and every tablet. Some studies and trials have shown that a matte (aka bead-blast) finish is beneficial for some products. If possible, perform a trial with multiple material, coating, and finish options. Sometimes, trial cases have shown that a matte finish may resolve sticking issues.

Another potential solution is to slightly increase the amount of lubricant used in the formulation. This improves the release characteristics of the compressed tablet from the punch cup surface. Please be aware that adding an excessive amount of lubricant could hinder the particle bonding process, leading to a more severe sticking situation.

If these solutions do not solve your sticking issue, a full tablet and tooling design review may be necessary.

REDUCING PICKING WITH FONT SELECTION

Font selection is often a battle of form over function. An ornate or decorative font, while pleasing to the eye, may cause picking problems and tablet defects. Figure 1 illustrates an impractical font selection. In general, most product formulations should be readily compressed into tablets using tools with this engraving design. However, many formulations are not typical, and problems can still occur. The partial pre-pick concept applies to any letter or numeral with fully enclosed areas ("islands" or "pads"). Many somewhat complex characters without fully enclosed areas are also prone to picking. Letters like E, S, K, and M, and numerals like 2, 3, and 5, all contain partially enclosed areas described as peninsulas.

The variation in engraving width, as well as the isolated and unnecessary peninsulas of the letters, are impediments to even powder compaction. This variation often leads to powder picking away from the compressed tablet core and remaining in the punch cup. Figure 2 illustrates the same embossing using a practical font that utilizes a consistent engraving width and increased engraving and corner radii. The font modification minimizes picking opportunities, increases the opportunity for consistent powder compaction, and yields the best possible cohesive forces for the tablet.

FIGURE 1. An impractical font selection. Hightlited areas show where picking is likely.

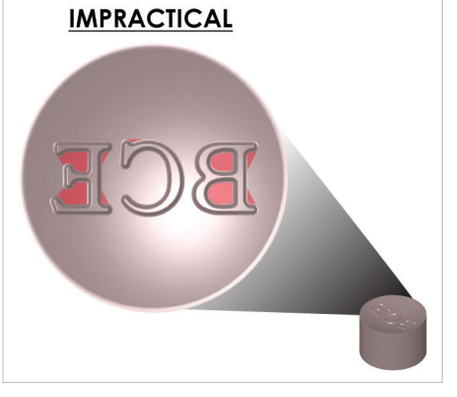

FIGURE 2. A simplified, more practical font selection.

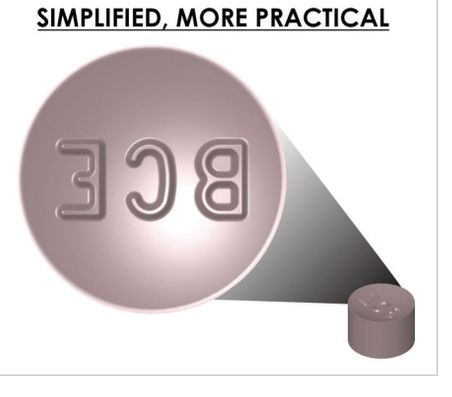

NATOLI

YOU DEMAND. WE DELIVER.

CHANGING THE ENGRAVING CUT

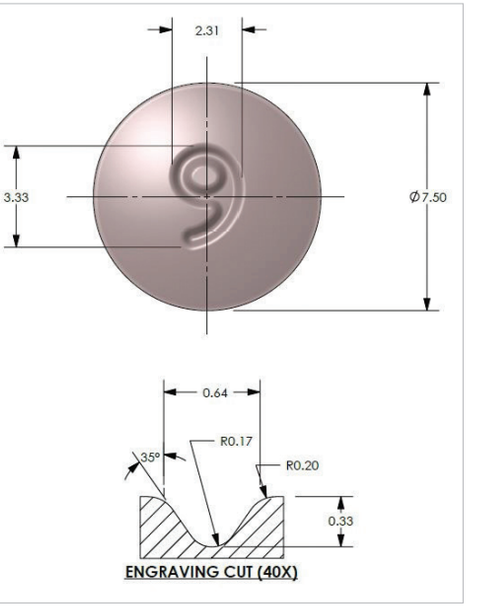

FIGURE 3. A typical round tablet with a "9" engraving cut.

Besides changes in the font selection, pay special attention to the design of the engraving cut itself. Figure 3 illustrates a typical round tablet. The engraving of the "9" is cut into the tablet with a common engraving cut width, depth, and 35-degree angle. To reduce or eliminate problems with material picking in the center island of the "9", pre-picking, either partial or complete, can be incorporated in the design. Figure 4 illustrates where the depth for the island is reduced from 0.33 mm to 0.17 mm. This reduction is defined as a partial 50-percent pre-pick. The amount of reduction can range between 10 and 100%, with 100% being the complete removal of the island. For branding or aesthetic purposes, consideration must be taken for tablets being coated post-compression, as excessive pre-pick may significantly reduce the logo's clarity.

FIGURE 4. The depth of the island is reduced from 0.33mm to 0.17mm.

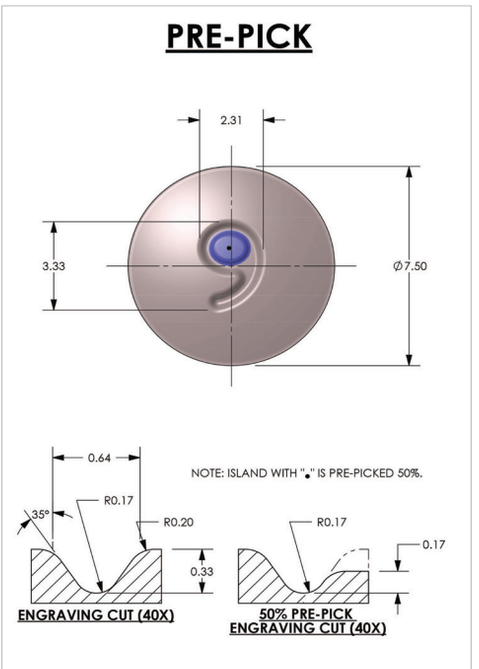

Prevent picking in these areas by tapering or ramping. Starting on the tablet surface at the open end of the peninsula, this feature tapers down toward the enclosed end of the peninsula by a percentage of the engraving depth. Peninsulas normally taper between 10 and 50 percent of engraving depth, with 30 percent the most common. A 50% taper of the "9" peninsula is illustrated in the lower right of Figure 5.

MATERIALS OF TOOLING CONSTRUCTION

Punches made from specialty steel is an option to consider when sticking is an issue, whether it is an ongoing problem or discovered during the research and development stage. It is widely accepted that punch steel with a high concentration of chromium in the alloy chemistry, usually between 16–18%, enhances release of the compressed product. A reputable tool vendor will offer multiple grades of high chrome steel. Further, several other specialty steels are available to enhance the performance and service life of the punches and dies regarding compressive strength, wear resistance, and corrosion resistance.

Prevent picking in these areas by tapering or ramping. Starting on the tablet surface at the open end of the peninsula, this feature tapers down toward the enclosed end of the peninsula by a percentage of the engraving depth. Peninsulas normally taper between 10 and 50 percent of engraving depth, with 30 percent the most common. A 50% taper of the "9" peninsula is illustrated in the lower right of Figure 5.

MATERIALS OF TOOLING CONSTRUCTION

Punches made from specialty steel is an option to consider when sticking is an issue, whether it is an ongoing problem or discovered during the research and development stage. It is widely accepted that punch steel with a high concentration of chromium in the alloy chemistry, usually between 16–18%, enhances release of the compressed product. A reputable tool vendor will offer multiple grades of high chrome steel. Further, several other specialty steels are available to enhance the performance and service life of the punches and dies regarding compressive strength, wear resistance, and corrosion resistance.

Also consider applying coating to their standard steel punches as an alternative to enhance the release characteristics of the punch faces. The most common coatings are hard chrome (Cr) and chromium nitride (CrN). Several other coatings are available as well, including zirconium nitride (ZrN), depending on the unique characteristics of the blend to be compressed. However, the thin chrome coating layer could wear off over time from the abrasion of the formulation and polishing. Thus, a high-chrome steel without coating may be a better long-term solution.

Discuss these issues with your tooling vendor early in the process to help reduce production issues and additional costs. Your tooling vendor should be able to explain the unique properties and advantages of the various steels and coatings.

FIGURE 5. A 50% taper at the peninsula engraving cut.

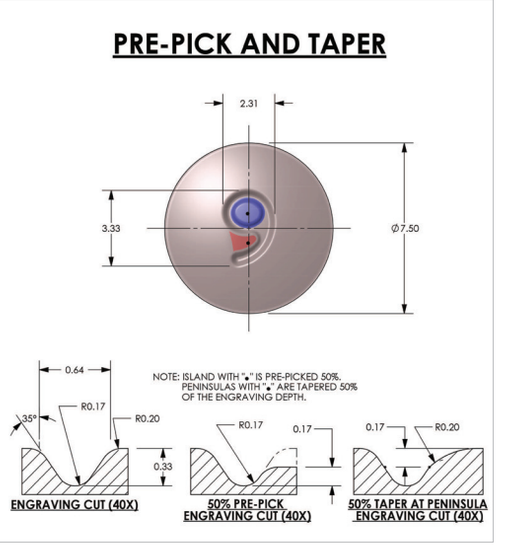

NATOLI

YOU DEMAND. WE DELIVER.

IN CONCLUSION

There are several means to speed a new drug to market, from slight formulation changes to major tablet design and tooling modifications. Help eliminate sticking and picking before they occur by discussing with your tool vendor all unique physical properties during the tablet design phase. Their insights in tablet design and resolving potential sticking and picking issues will benefit the final product and help create a tablet that is accepted by both the manufacturer and the consumer.



Natoli now offers five, full-sized (36" x 24") posters for quick, at-a-glance references to tablet defects, spot-checking for tool damage, step-by-step tool maintenance procedures and more! Hang in cleaning, inspection, and manufacturing areas for easy viewing. Order one poster or the whole set.

CHAPTER 4:

QUALITY OF STEEL

In the design and manufacture of tablet compression tooling, nothing is more important than the quality of the materials being used. Steel quality is the fundamental building block upon which all successive value-added steps are laid. Steel quality describes how well a steel meets its specified chemistry, and its cleanliness. It also includes the degree to which it is free of impurities or inclusion, homogeneity of the microstructure, grain/carbide size, and, sometimes, whether it meets the mechanical requirements for that steel.

Steel quality should be an inherently quantifiable attribute that determines its ability to perform its designed function without limitation because of internal flaws or large variances in microstructure or homogeneity. Process control in all areas of steel production and refinement will determine its quality. Heat treatment, while not a determinant in the initial quality of steel, must be done properly to ensure success. A quality steel that is poorly heat-treated will fail.

NON-POWDER METAL STEELS are produced in the same way, with material charges added to a furnace; the melted metal is called a heat. Chemistry of the heat is checked, and adjustments (alloy additions) are made to ensure that the chemistry falls within the specified range. Once the chemistry is correct, the heat is tapped, slag is removed, and the heat is poured into ladles. The steel in the ladle is then cast into molds. After solidification in the mold, the ingots or blooms are reheated and rolled into a bar or plate to be used to produce tooling.



NATOLI

YOU DEMAND. WE DELIVER.

POWDERED METALS are produced by compacting very fine powdered metal (densification) using a high temperature while being hydrostatically compressed. The resulting product is a fully dense billet that is then fabricated into a bar or plate. The physical distinction between a powder metal bar and a traditionally cast bar is that the microstructure of the powder metal is typically of a finer grain structure and is more homogeneous.

This control over carbides and grain structure enhances the mechanical properties of the steel and allows unique chemistries that are unavailable to traditional cold rolled tool steel. Because of the manufacturing process requirements, powder metals are generally more expensive.

BELOW ARE STEPS TAKEN BEFORE AND AFTER the initial pouring of steel, but prior to rolling it, to increase the cleanliness of the traditionally cast steels.

VACUUM INDUCTION MELTING (VIM) melts the "material charge" in a vacuum before pouring. This process reduces the partial pressures of gas in the melt, preventing the formation of some oxides and producing cleaner steel.

ELECTROSLAG REMELTING (ESR) takes a cast ingot prior to rolling and places it into a chamber with reactive molten slag that has high-current electricity passed through it, melting the ingot. As the ingot melts, the liquid metal passes through the reactive slag, removing any impurities, and solidification takes place where the chamber wall chills the liquid metal. The solidification rate is much higher than the casting process, reducing the amount of segregation. The process continues until the entire ingot has passed through the slag and re-solidified on the opposite side. ESR produces very clean homogeneous steel with a refined cast structure.

VACUUM ARC REMELTING (VAR) is similar in result to ESR, but an arc melts the ingot under vacuum. The vacuum lowers the partial pressure, removing any gasses within the ingot, leaving a cleaner ingot with a homogeneous microstructure and little segregation because of the higher solidification rates. Once the ingot solidifies, the next step is the rolling process.

THE ROLLING PROCESS reduces the steel ingot in cross section while simultaneously elongating it to produce the wrought bars used to manufacture tablet compression tooling. This reduction helps reduce segregation and refine carbide and grain size. Steel with a fine grain size and small, well-dispersed carbides will perform better than steel with larger grains and coarse carbides - the larger the reduction, the greater the refinement. Tight control over the temperature and amount of reduction per pass must be maintained during the rolling process to ensure voids or cracks do not "open up" during rolling.

ANALYSIS of the bar's chemistry and microstructure, after rolling, provides assurance that the bars were produced within specification. The end users should perform due diligence by having sample bars randomly tested and analyzed by an independent lab to ensure the samples meet specifications.

During this quality assurance, at the mill or with the end user, Natoli Engineering quantifies the cleanliness of our steel through image analysis, either comparatively with representative standards or with software designed to sort and classify inclusions. Several worldwide standards exist (ASTM, DIN, JIS, ISO) ensuring steel cleanliness and quality measurements are consistent and defined.

Because steel quality can be quantified and compared between vendors, it should be the basis for making informed decisions about the tools you purchase.

Sales people often use steel quality as a selling point. They will say that their material is of higher quality than other suppliers. If you find yourself in this situation, ask for a report based on a published steel quality testing procedure.

Natoli Engineering requires all steel to meet cleanliness and strict internal carbide size and distribution standards. Besides seeking the highest quality steel, we quarantine all incoming material until the Natoli Engineering Metallurgy Department verifies that all specifications and standards are met: either ASTM A681-06 or manufacturers' specifications for chemistry and ASTM E45 Method D (Low Inclusion Content).



NATOLI

YOU DEMAND. WE DELIVER.

NATOLI STEEL SPECIFICATION CHART

Steel Type	Steel Grade	TOOLING TYPE		Hardness Rock-well C	BENEFITS			
		Punch	Die		Wear Resistant	Improved Toughness	Corrosion Resistant	Compressive Strength
3Ni	Standard	•	—	53-55	—	•	—	•
S-1	Standard	•	—	56-58	—	•	—	•
S-7	Standard	•	•	56-58	—	•	—	•
D-2	Premium	•	•	58-60	•	•	•	—
DC-53	Premium	•	•	59-61	•	•	•	•
K-340	Premium	•	•	58-60	•	•	—	•
D-3	Premium	—	•	59-61	•	•	—	•
440C	Premium	•	•	54-56	—	—	•	—
M-340	Premium	•	—	56-58	•	—	•	—
A-2	Premium	•	•	58-60	—	•	—	—
M-2	Premium	•	•	58-60	—	•	—	—
PM-15V	Powdered Metal	—	•	58-60	•	•	—	—
PM-9V	Powdered Metal	•	•	53-55	•	•	—	—
PM-3V	Powdered Metal	•	•	56-58	•	•	—	•
PM-10V	Powdered Metal	•	•	58-60	•	•	—	—
PM-M2	Powdered Metal	•	—	58-60	•	•	—	—
PM-M4	Powdered Metal	•	•	58-60	•	•	—	—
PMS-90V	Powdered Metal	•	—	56-58	•	—	•	•
Hastelloy	Powdered Metal	•	—	—	—	—	•	—
Carbide Dies	Specialty	—	•	—	•	—	—	—
Carbide Tip Punches	Specialty	•	—	—	•	—	—	—
Ceramic Dies	Specialty	—	•	—	•	—	•	—
Sleipner (Standard)	Die Segment Plate	—	—	61-63	•	•	—	•
M-390 (High Chrome WIP)	Die Segment Plate	—	—	58-60	•	—	•	—

The ASTM E45 International Steel Testing Procedure is the test method used to determine the quality and cleanliness of tool steel.
Natoli Engineering's value is less than 1.5.

NATOLI STEEL COATING SPECIFICATION CHART

Coating	CHARACTERISTICS			TOOLING TYPE		ALLOWABLE STEEL GRADES				BENEFITS			
	Hardness	Thickness	Color	Punch	Die	S	P	PM	SPC	RF	RS	WR	CR
Hard Chrome Plating	950-1200 HV	3-6 microns	Silver	•	•	•	•	•		•	•	—	•
Natoli Ultracoat	1200 HV	5-10 microns	Silver	•	—	•	•	•	•	•	•	•	•
Chromium Nitride (CrN)	2300 HV	~ 3 microns	Metallic Gray	•	•	•	•	•	•	•	•	•	—
Titanium Nitride (TiN)	2300 HV	~ 3 microns	Metallic Gold	•	•	•	•	•	•	•	—	•	•
Diamond Like Carbon (DLC)	2500 HV	1-2 microns	Black	•	—	•	•	•	•	•	•	•	—
Nickel/Fluoropolymer	—	20-50 microns	Gold	•	•	•	•	•	•	•	•	—	•
Teflon	—	20-50 microns	White	•	•	•	•	•	•	•	•	—	•
Plasma Nitriding	1000 HV	75-100 microns	Black	•	•	—	•	—	—	—	—	•	—
Boron Carbide	3400 HV	1-2 microns	Black	•	•	•	•	•	•	•	•	•	•
Diamond Like Carbon (DLC) 40/41	2000-2800 HV	~ 5 microns	Black	•	•	•	•	•	•	•	•	•	•

LEGEND:

S = Standard Steel Grade
P = Premium Steel Grade
PM = Powdered Metal Steel Grade
SPC = Specialty Steel Grade
RF = Reduced Friction
RS = Reduced Sticking
WR = Wear Resistant
CR = Corrosion Resistant

Carbide Value (L+W)/2 (mils)	Number of Carbide Allowed
<2.0	Unlimited
20.-2.5	5
2.6-3.0	4
3.1-3.5	3
3.6-4.0	2
>4.0	1

Requirement: Maximum of five carbides per sample measuring 2.0-2.5 carbide value.

Mimimum of Severity Level Numbers (Methods A, D, and E)*				
Total Length in One Field at 100x, min., mm (in.)				
Severity	**Type A**	**Type B**	**Type C**	**Type D****
1/2	307 (0.15)	1.7 (0.07)	1.8 (0.07)	1
1	12.7 (0.50)	7.7 (0.30)	7.6 (0.30)	4
1 1/2	26.1 (1.03)	18.4 (0.72)	17.6 (0.69)	9
2	43.6 (1.72)	34.3(1.35)	32.0 (1.26)	16
2 1/2	64.9 (2.56)	55.5 (2.19)	51.0 (2.01)	25
3	89.9 (3.54)	82.2 (3.24)	74.6 (2.94)	36
3 1/2	118.1 (8.78)	197.3 (7.77)	173.7 (6.84)	49
4	149.8 (5.90)	153.0 (6.02)	173.7 (6.84)	64
4 1/2	189.8 (7.47)	197.3 (7.77)	173.7 (6.84)	81
5	223.0 (8.78)	247.6 (9.75)	216.3 (8.52)	100

*** Note that length values in this table have been changed to be compatible with automated rating methods. The significant length changes occurred at minimum rating levels of ½ where manual methods are least accurate. Inclusion counts for Type D inclusions have also been revised. In this case, the changes are greatest for high counts, which are above the levels of material acceptance standards.**

**** Maximum aspect ratio for Type D inclusions is 5:1.**

CHAPTER 5:

TABLET COMPRESSION TOOLING: LAND OR NO LAND?

Tablet **land** is the narrow, horizontal surface perpendicular to the tablet's periphery, creating a junction between the tablet's periphery and a convex cup (see Figure 1).

Land is incorporated into the tablet's design primarily to:

- Increase the strength of the punch tip edges.
- Increase the wear characteristics of the inner edge of the punch cup.
- Reduce the severity of nicks on punch tip edges.

On one hand, the land adds strength and durability to the punch tip. However, it can be perceived as making it difficult to coat the tablet, which is not always true.

When designing tablet land, one should take a holistic approach. The width of the land depends on the:

- Tablet size
- Cup depth
- Cup configuration
- Punch steel selection
- Required compression force
- Granulation's abrasiveness

Round tablet designs with cups deeper than standard are normally designed with 0.002 inch to 0.008 inch (0.05 mm to 0.20 mm) of land. Special shaped punch tips are commonly designed with 0.002 inch to 0.015 inch (0.05 mm to 0.38 mm) of land. In extreme cases, land wider than 0.020 inch (0.50 mm) will add strength and longevity to the punch tip.

FIGURE 1

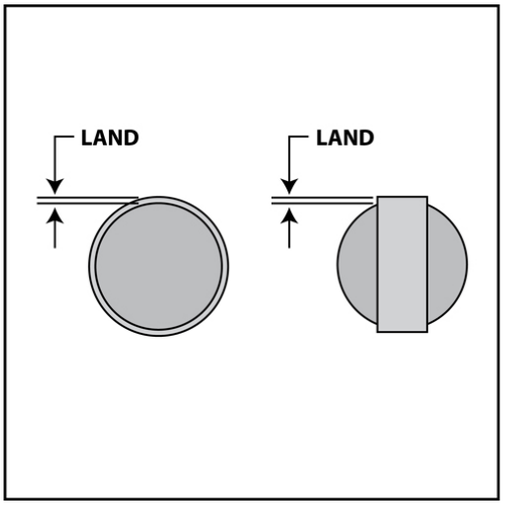

NATOLI

YOU DEMAND. WE DELIVER.

As the cup depth increases, so does the slope of the cup at the periphery of the punch tip. This can lead to deformed tip edges, or tip fractures under moderate to heavy compression loads when the tip has little to no land. When a punch begins compressing a tablet, the stress and abrasion is initially higher at the tip edge. The compression stress is distributed across the cup's surface as the formulation is forced towards the middle of the cup (Figure 2). This also describes the wear issue at the outer edges of the cup face as the formulation flows across this area of the cup. Adding land to the tablet design will reduce the likelihood of punch tip edge deflection as it increases the strength and durability of the tip edge. With deeper cup designs, wider lands should be utilized to strengthen the tip.

HOW MUCH LAND?

If you are using a tablet design program, such as Natoli's TabletCAD, and you do not know how much land to incorporate, a general rule of thumb is to make the value of the land width 10% the value of the cup depth. For example, if the cup depth is 0.050 inch (1.27 mm), the land should be at least 0.005 inch (0.13 mm) wide. However, if you are compressing with a lot of force, or are compressing with an abrasive formulation (or both), is best to have a 2-to-1 land to width ratio. (In this case, 0.010 inch (1.25 mm) or more.)

Punches made from premium tool steel used for compressing nutritional supplements should be designed with wider land. This is primarily due to the reduced shock resistance of these steels compared to standard steels, the typical requirement of additional compression forces necessary to compress nutritional supplement tablets, and the usual elevated abrasiveness of the formulations in that industry.

FIGURE 2

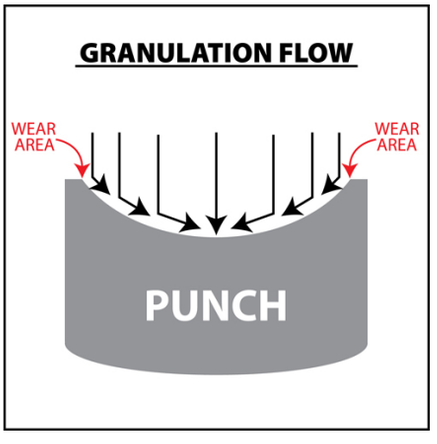

FIGURE 3

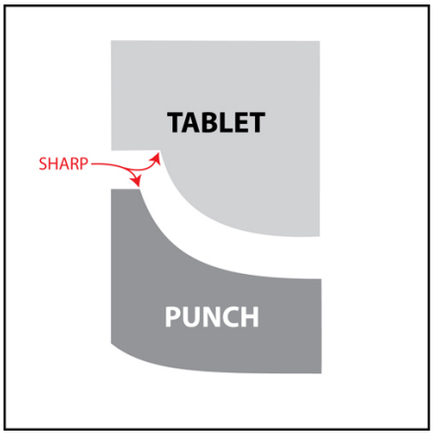

Although tablet compression punches are made from high-quality tool steels and are heat treated for optimal wear resistance, the punch still requires extreme care while handling, during setup, and during press operation. Incidental contact between punch tips or contact between a punch tip and another hard surface can damage the tip edge. A punch tip designed with an appropriate land width will reduce the severity of the damage due to the added strength in this area of the punch.

The presence of punch tip land results in a small "lip" or "ridge" around the periphery of the tablet at the junction of the tablet face and the bellyband, or tablet side wall. This edge may be somewhat more prone to erosion during the tumbling action in the coating pan. The junction of the land to the cup face can result in a sharp inside corner on the tablet (Figure 3). To avoid difficulties during the coating process, the land at this junction should have a generous blend radius. This will eliminate the sharp corner by adding a curved transition between the two surfaces (Figure 4). This is standard practice on Natoli's tablet designs and punches. If additional blending is desired, state on the tablet drawing that the land is blended with an aggressive radius. Generally, the tablet design drawing will indicate the land width before the inside corner is blended. Additional dimensions can be added to the tablet drawing to indicate the desired land width after blending (known as measurable land), and the blend radius value may also be depicted. Blending the inner edge of the land can be achieved by:

- Incorporating this requirement into the design of the hob, so it is formed at the onset of the punch manufacturing process.
- Blending the punch cup during the final polishing at the end of the manufacturing process.

The slope of the cup adjacent to the inner edge of the land on punches with a compound cup incorporated into their design is greater than that of single radius cups. The result is a reduction in allowable tip force. Therefore, land becomes even more critical, replenishing much of the strength lost due to the steeper slope. Tooling manufacturers commonly suggests wider land when a compound cup design is required.

FIGURE 4

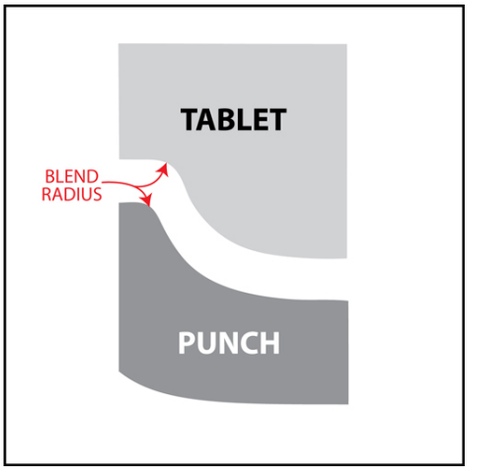

It must be noted that the land is the area of most concentrated wear on the punch cup. Monitor this wear with regular visual inspections. To extend the life expectancy of the tools and to maintain consistent tablet quality, it is critical to rework and buff the punch cup to re-establish and blend the land. It is generally acceptable to tolerate some reduction of the cup depth to maintain the land around the edges of the punch cup on in-process tooling.

Many tablet designs have evolved to incorporate a heavy land for punch tip strength and longevity without effecting overall tablet quality. High volume nutritional supplement manufacturers commonly implement land of 0.020 inch (0.50 mm) into tablet designs that are coated successfully. Generic manufacturers often duplicate this popular design.

Generally, an increase in land width will strengthen the punch cup and reduce the likelihood of tip deflection or breakage while still allowing for higher compression forces and extended tool life. Let your experienced tooling manufacturer guide you through the design process to ensure successful tableting.

CHAPTER 6:

EXTENDED HEAD FLATS INCREASE DWELL TIME

Many types of punches and dies are available to help compress difficult drug products. Increasing the diameter of the head flat, though, is the easiest way to prolong dwell time without switching to a press with a smaller turret pitch circle (generally with fewer stations), or without decreasing the turret speed. Either of these options could lower your production output. Examining the role of dwell time early in the R&D stages of product development will determine which head flat, whether standard, extended, or even reduced/eliminated, is ideal for specific products. A proactive approach helps minimize compression-related issues, which, left unaddressed, could limit or hinder production. In this chapter, we will look at the benefits—and some drawbacks—of using extended head flats.

BENEFITS OF USING AN EXTENDED HEAD FLAT

The extended head flat is a commonly overlooked punch modification that increases the diameter of the flat area atop the punch head. You can use extended head flat punches with standardized cam tracks that meet Tableting Specification Manual (TSM) or European (EU) standards. The design differs only slightly between a TSM domed head and an EU head. One difference is a reduction in the head's thickness allowing the larger flat to fit through

Extended head flat vs. standard head flat



NATOLI

YOU DEMAND. WE DELIVER.

the same cam profile. Its thinner head allows extended head flats to traverse standard cams without modifications to the tablet press or cam tracks. Dwell time depends on press speed, the pitch circle diameter of the turret, and the head flat's diameter (Figure 1).

Dwell time (ms)

$$dt = \frac{Dhf}{Dpc\ x\ \pi\ x\ rpm}(60)(1000)$$

Where:

dt=dwell time (milliseconds)

Dhf=head flat diameter (millimeters)

Dpc=pitch circle diameter of turret (millimeters)

rpm=revolutions per minute (turret speed)

FIGURE 1

A PRACTICAL EXAMPLE

A typical production scale rotary press has a pitch-circle diameter of 410 mm (16.142 in.). Assuming an operating speed of 50 RPM, a standard B-type punch, and TSM domed head flat of 9.525 mm (0.375 in.), would result in a dwell time of 8.88 milliseconds. Meanwhile, the dwell time of a B-type punch with TSM domed head with extended head flat 15.0 mm (0.591 in.) would be 13.98 milliseconds (Figure 2). Figure 3 illustrates the differences in dimensions between a standard B-type TSM domed head and a Natoli B-type TSM domed head with this extended head flat. The larger head flat increases dwell time by more than 50% without reducing the turret speed.

The extended head flat punch may also reduce the amount of compression force needed to form a tablet. If the time spent under compression increases, the amount of force necessary to maintain the same tablet hardness (and density) may decrease. The reduction in required compression force depends on the characteristics of the granulation being compressed as well. The neck transfers the force from the head, down through the barrel, to the tip and then eventually into the formulation. But the overlooked root cause here is that the neck diameter of the punch is a limiting factor in the head flat's size. If the

Rotary Press with Pitch-Circle Diameter of 410mm

B-TYPE TOOLING	ROTATION SPEED	DWELL TIME
TSM Domed Head Flat 9.525mm (0.375")	50 RPM	8.88ms
Natoli TSM Domed Head Flat Extended Head Flat 15.00mm (0.591")	50 RPM	13.98ms

FIGURE 2.

head flat gets larger than the neck's diameter, it will not have the support required to transfer the force generated when it contacts the pressure roll (see Figure 4). This can ultimately lead to the head or neck failing due to extreme stress induced by the leverage action.

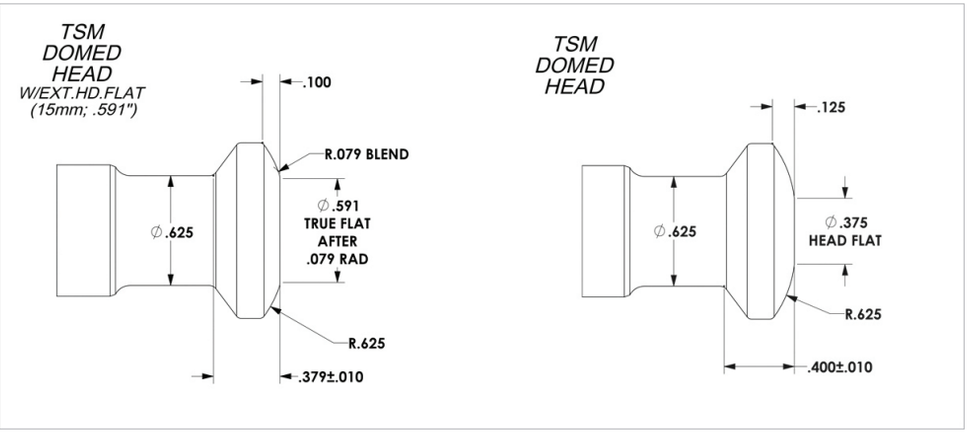

FIGURE 3

DRAWBACKS OF USING AN EXTENDED HEAD FLAT

Extended head flats can also be oval or elliptical. The oval head flat's primary drawback is only passing under the pressure rolls in one direction along the major axis of the oval shaped flat. For this reason, punches with an oval head flat must be keyed even when tips are round. This prevents them from rotating as they pass under or over the pressure rolls.

With these punches requiring keys for oval or elliptical head flats, punch heads can experience accelerated wear with repeated contact between the punch head and the compression roller at the same spot, as there is no punch rotation.

Additionally, if a turret does not have lower key slots, then round tip tooling with an oval head cannot be used. The benefit and functionality of the elliptical extended head flat will be lost if the round tipped lower punch rotates. Another limitation is that if two presses have turrets with key slots of different angles, the oval head flat's punches cannot be interchanged because the different angle will alter the orientation of the head flat with respect to the pressure rolls. However, circular extended head flat punches do not require keyed tooling for round tip punches, as oval/elliptical shaped head flats do. This allows them to be used interchangeably on many makes and models of tablet presses. The head flat can even be customized to achieve a specific dwell time on a given press.

Although please keep in mind that merely extending the head flat is not always the ideal way to mitigate common tableting issues either (e.g. capping), even if it offers other benefits described above. At the end of the day, extended head flats are merely a tool to be applied appropriately after the exact problem has been diagnosed. For further help in identifying the root cause of tableting issues and possible solutions, please contact us. Eliminate any misconceptions by working with a knowledgeable tool vendor like Natoli Engineering early in the development process.

Recent studies sponsored by Natoli Engineering have shown that for some products, reducing the head flat or even eliminating the head flat entirely (thus reducing or eliminating the dwell time) can be beneficial in resolving capping issues. Natoli Engineering exclusively offers a unique set of R&D tooling that allows you to easily change out head flats from no head flat to an extended head flat (without special tools) which can be beneficial in the powder characterization stage of product development.

FIGURE 4

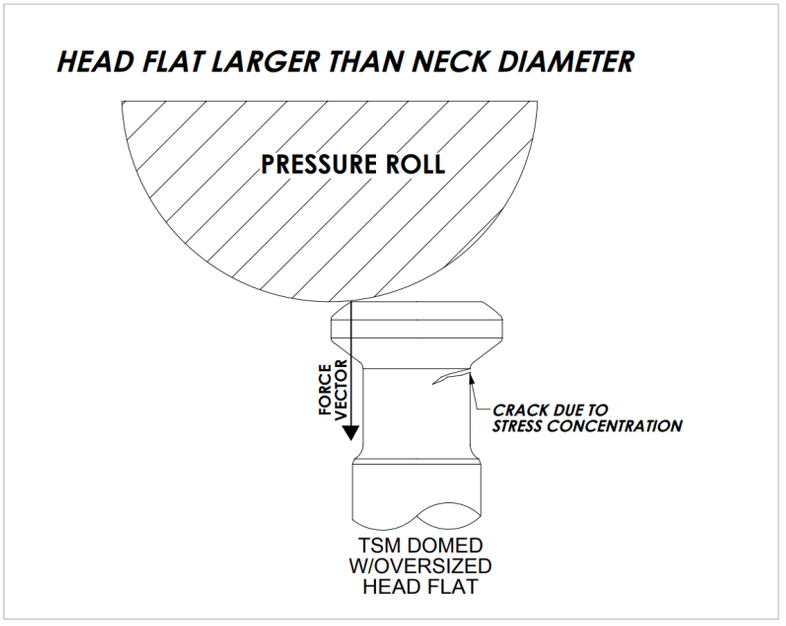

CHAPTER 7:

UNDERSTANDING THE IMPORTANCE OF PUNCH LENGTH AND CUP DEPTH

Manufacturing tablets to a uniform hardness, weight, and thickness requires tablet press punches to be a consistent length. In this chapter, we describe what punch length is, how to measure it correctly, and how wear affects length and tablet consistency. We also address the importance of specifying cup-depth tolerances. If not correctly understood, tablet defects could be attributed to the wrong source. Thus, it is important to establish a punch inspection and maintenance program that verifies all punch lengths and cups are within dimensional tolerances.

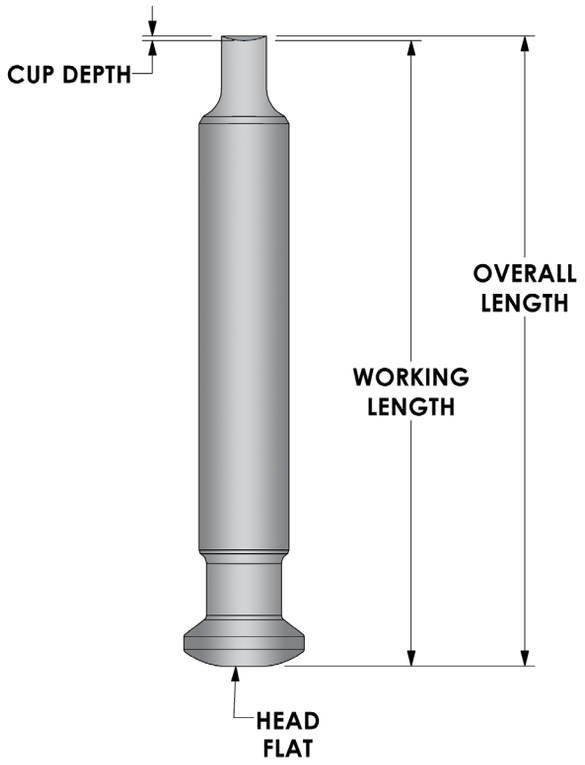

Figure 1. Cup depth, working length, overall length, and head flat of a tablet press punch.

WORKING LENGTH

Punches are engineered and manufactured to consistent lengths. The working length of a punch is measured as the distance from the head flat to the lowest measurable area of the punch cup. Figure 1 illustrates the cup depth and the overall length, which is the distance from the head flat to punch tip. The punch tip comprises the cup and the land (Figure 2).

The working length of punches is engineered to a standard range of 0.002 inch (0.051 mm). This means that, within a set of punches, the difference between the working lengths of the longest and the shortest punch is no more than 0.002 inch (0.051 mm). Periodically inspect the punches to ensure working lengths do not exceed that tolerance (or the range your company specifies). When confirming uniform working length, it is important to inspect the upper punches independent of the lower ones.

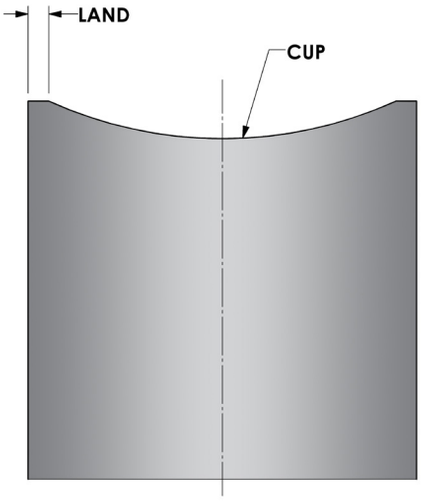

FIGURE 2

Correct measurement is also important. Do not calculate the working length by subtracting the cup depth from the overall length, as that can incorrectly show some tools are out of specification. The tolerances of the overall length and cup depth are greater than that of the working length. The working length of the punches should be measured for deviation from punch to punch, rather than from a calculated number. When measuring, use a digital indicator mounted on a steel post fixed to a granite base. This basic measuring equipment costs less than $500, yet provides accuracy similar to elaborate systems priced more than $50,000.

Whatever equipment you use, it is more complicated to measure the working length of punches that have embossing or a bisect at the lowest area of the punch cup. In those cases, measure from the deepest accessible area of the cup with the tip of the indicator (Figure 3). Once you have identified the lowest area of the cup, be sure to measure consistently from there when checking the entire set.

Most reputable tooling manufacturers can provide a working-length matching report when they deliver a new set of punches. The matching report pairs each upper punch with a lower punch, from the longest to shortest, numbering them accordingly. Matched punch sets create the best possible consistency in tablet hardness and thickness, and a matching report offers helpful guidance during press setup.

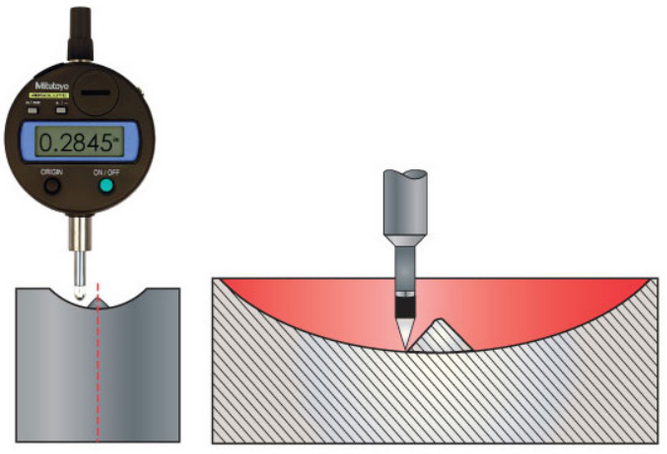

Figure 3. Measure working length from the deepest area of the cup that is accessible with the point of the digital indicator.

The length of the lower punch is more critical than that of the upper punch. That's because the length of the lower punch largely determines how consistently product (granulation) fills and doses in the die. (Product flow characteristics and lower punch binding also strongly influence the uniformity of die filling.) Deviations in the amount of product allowed into the die affect tablet hardness and weight.

CUP DEPTH

The distance from the tip edge of the punch to the lowest theoretical point of the cup measures the cup depth. Some cup configurations have varying depth, such as those used to manufacture tables with scalloped edges. The cup determines the configuration and appearance of the tablet faces. The tablet sidewall is the area between the two tablet faces created by the die (Figure 4). It is also referred to as the tablet gate of the tablet band. Although the sidewall is generally not inspected or measured, it is important for tablet appearance and manufacturing. Ideally, the sidewall width will be evenly proportioned with the overall tablet thickness. This is important because a tablet with an excessively thick sidewall appears to be thicker overall, creating the perception that the tablet will be hard to swallow. An excessively thick sidewall also requires the tablet press to exert greater force to eject the tablet from the die.

Sidewall width depends on the tablet hardness, weight, and thickness in relation to the cup depth. As the punch tip wears, cup depth decreases and sidewall thickness increases. Thus, when comparing two tablets—made from a shallow-cup punch and a deep-cup—the shallow-cup punch has a thicker sidewall. However, the shallow-cup tablet is measurably thinner overall than the deep-cup tablet. Its wider sidewall makes it not only aesthetically displeasing, but difficult to manufacture.

The wide sidewall of a shallow-cup tablet also can cause difficulties during film casting because the tablet may erode at the sharp corner where the shallow-cup radius and the vertical sidewall meet, increasing cup depth, reducing sidewall thickness, addressing the issue, and creating a more balanced appearance.

Figure 4. The area between the two tablet faces is called the tablet sidewall.

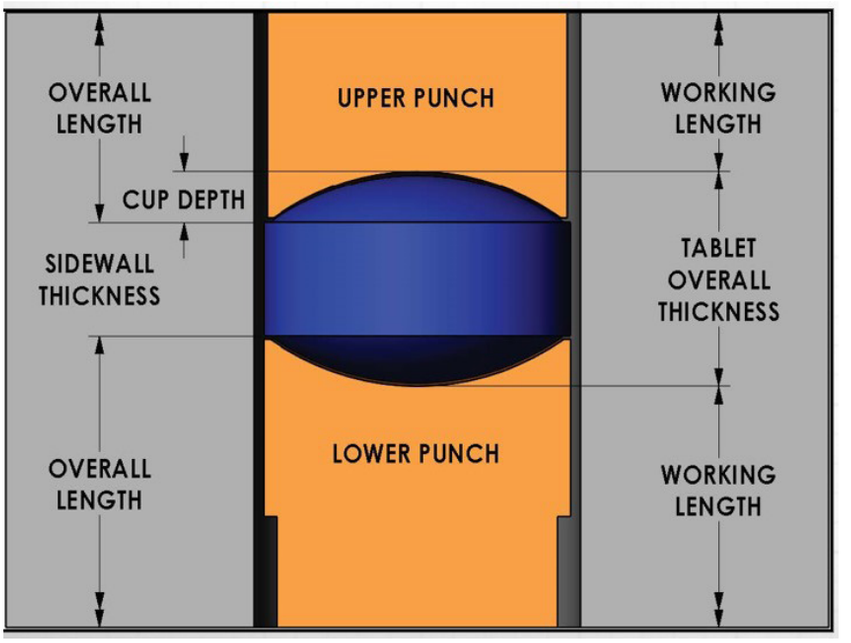

The wide sidewall of a shallow-cup tablet may create a sharp corner where the radius and the vertical sidewall meet. The corner can erode easily during film coating.

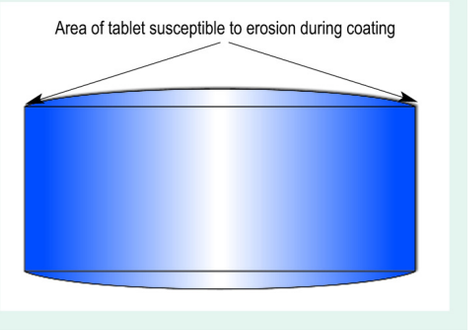

Figure 5.

Most tablet press punches have a cup-depth tolerance of ±0.003 inch (0.076 mm), which is published in the Tableting Specification Manual. This tolerance is widely accepted by the tablet compression industry and is used by tooling manufactures worldwide. But while the published tolerance is adequate for most applications, it may be too liberal if manufacturing small-size tablets or too conservative if manufacturing large-size tablets.

To understand this point, consider a small-diameter, flat-faced, beveled-edge tablet. Let's assume that this tablet is a Schedule II drug that requires a cup depth of approximately 0.010 inch (0.254 mm). If you adhere to the published cup-depth tolerance, the cup depth could range from 0.007 to 0.013 inch (0.178 to 0.333 mm). That means you could create a total deviation equal to 60% of the desired cup depth.

Now consider a larger modified-capsule tablet (such as a nutritional supplement). For this tablet, let's say the deepest part of the cup may be 0.060 inch (1.524 mm). Following the published standard, the acceptable range would be 0.057 to 0.063 inch (1.448 to 1.600 mm). Since the cup is deeper than the one used to make the small tablet, the percentage range of the deviation is substantially less: 10%. That is a considerable difference, the importance of which is magnified by that fact that this small-diameter tablet is a Schedule II pharmaceutical product.

To eliminate excessive cup-depth deviation, consider establishing the tolerance as a percentage of the desired cup depth. For example, specifying a tolerance range of 20% of the desired cup depth for the first cup (0.010 inch deep) changes the range from 0.007 to 0.013 inch (0.1778 to 0.330 mm) to 0.009 to 0.011 inch (0.229 to 0.279 mm). Cup depth inspection is simple and uses the same basic measuring instruments used to inspect the working length: a digital indicator mounted on a steel post fixed to a granite base.

OVERALL LENGTH

The overall length is the least important punch length dimension. It is the distance from the punch tip to the head flat. The overall length is a reference dimension that comprises two or more critical dimensions: the working length and the cup depth. Since both working length and cup depth are manufactured to a specific tolerance, there is no need to assign a tolerance to the overall length. If the working length and the cup depth are within the acceptable range, the overall length will be consistent, and inspection is unnecessary. Note: the overall length of the lower punch is critical when setting the punch height for uniform tablet take-off. It is important because it minimizes the potential for tablet damage.

If your company's standard operating procedures require inspection of the overall length, use the same equipment used to inspect the working length and cup depth. Of course, a tolerance range and a pass-fail policy must also be established.

A WORD ABOUT PUNCH WEAR

With normal use, punches show the most wear at their tips, which reduces the cup depth. Tip wear also reduces the overall length of the punch, although it does not affect the critical working length. Head flat wear (not as common as punch-tip wear) further reduces the overall length and the working length. Head flat wear does not affect cup depth.

Normal maintenance of the cup face, tip, and head also affects punch length. Polishing the face using fine abrasives, hard felt bobs, or stiff brushes can alter critical lengths. Likewise, the punch cup will eventually deepen and possibly alter the critical working length if hard felt bobs and/or stiff brushes are used with abrasive compounds to remove product adhered to the face or surface discoloration or pits. This is typically the result of compressing abrasive products.

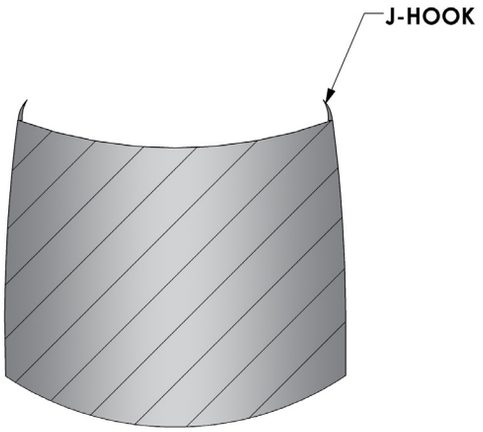

Figure 6. When the land of the punch tip wears, it becomes very thin and may form a J-hook.

Wear can also occur at the land (Figure 2), which is the narrow flat area located at the perimeter of the punch tip. The land is subject to abrasion during compression and is commonly the first area of the punch to wear. When the land wears, the tip edge becomes thin, even razor sharp, sometimes causing J-hooking (Figure 6). J-hooks normally occur on the upper punch tip and are a common cause of tablet capping and lamination. Polishing the punch using a soft cotton wheel and a polishing compound will remove a J-hook and restore the land. While polishing and restoring the land prolongs the useful life of your punches, it eventually reduces the cup depth and overall length.

CONCLUSION

Uniform tool length is critical for maintaining tablet consistency and smooth press operations. The most important punch dimension related to tablet quality is the working length, followed by the cup depth, and then the overall length. To achieve the highest level of tablet uniformity, most reputable tablet compression tooling manufacturers provide a working-length matching report. Setting up the tablet press in the sequence of the supplier's matching report provides the best scenario for tablet consistency.

CHAPTER 8:

THE KEY TO TABLETING SUCCESS: HOW TO CHOOSE THE RIGHT TOOLING

Choosing the right tooling can increase tablet output, decrease waste, and ultimately determine the success of a product launch.

CONSIDER PRODUCTION LIMITATIONS RIGHT FROM THE START

Generally, a tablet starts as a concept in a company's marketing department without serious consideration of how it will be manufactured. If the marketing staff does not understand what's feasible, a complicated or impractical tablet design could make it to the production floor before someone discovers the tablet may be difficult or impossible to manufacture.

Avoid this mistake by including an experienced tool manufacturer in the early planning stages of new product development. Organize a meeting with your tooling vendor to include team members from marketing, product development, engineering, and production. This extensive collaboration allows everyone to share their ideas and concerns, while utilizing the resources and expertise of a tool manufacturer who can steer you away from common problems by avoiding designs that have proved troublesome or impractical.



NATOLI

YOU DEMAND. WE DELIVER.

ASK THE RIGHT QUESTIONS

During the meeting with your tooling vendor, there are a few critical questions to ask before making any decisions on tablet design:

- Given the intended weight and volume, what size, shape, and cup configuration will the product require?
- Will the tablet be coated?
- How will the configuration of the cup affect the compression force required to compress the tablet?
- Is the product prone to sticking and picking?
- Is the product sensitive to the heat of standard operating temperatures?
- Is the product abrasive or corrosive?

Failure to answer these questions during initial stages of product development will likely cause major problems when the product reaches the production floor. Every detail counts—be sure to provide the tooling vendor with as much information as possible. Preventative measures taken early in the process will lead to improved compressibility, increased consistency, and longer life from your tooling and other processing equipment.

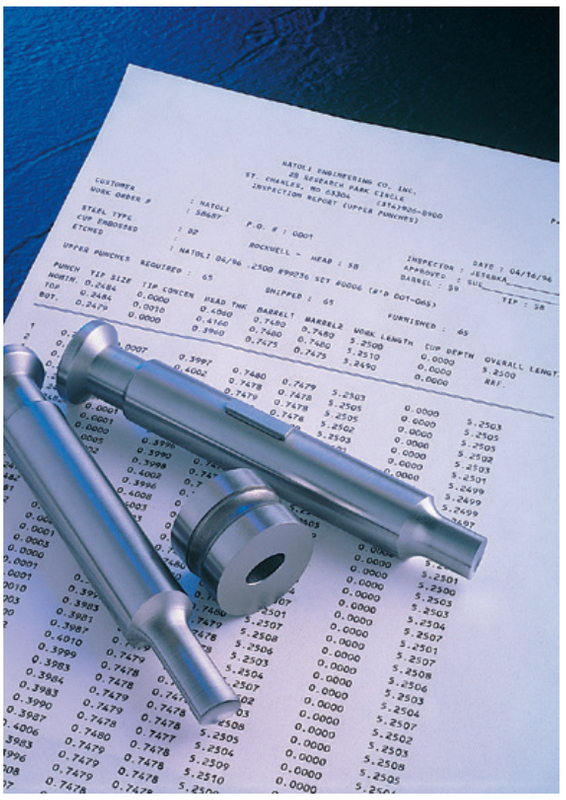

STEEL SELECTION

Steel selection is one of the most important factors to consider when choosing your tablet compression tooling. General-purpose tool steels, such as S1 and S7 for punches and D3 for dies, provide a good combination of wear-resistance and toughness. If your product is abrasive, consider using K340, DC53, or D2 grades for punches, and in extreme cases, contemplate punches from powdered metal (PM) steels and dies with tungsten carbide inserts. With severely corrosive formulations, 440C or M340 high-chromium steels are good options. When using premium tool steels, the punch must have a strong cup design to avoid tip fractures. As you select tool steels, consideration should be given to both the formulation characteristics and the tool design to determine the optimal material. Tooling vendors are a great resource for information and guidance, so be sure to take advantage of their knowledge and expertise.

CONCLUSION

Remember, every formulation is different, and no two products are exactly alike. They don't run the same, and they don't perform the same under compression and decompression forces. Likewise, when choosing tooling for tablet presses, tablet manufactures need to know that one size does not fit all.

There are standards for tooling, but don't expect the standard tool configuration to always be the optimal configuration for your product. Ask your tooling vendor questions early in the development process. They will have the knowledge and experience to help you with product development.

